Nig. J. Pure & Appl. Sci. Vol. 39 (Issue 1, 2026)
e-ISSN 2756-4045
(C) 2026 Faculty of Physical Sciences and Faculty of Life Sciences, Univ. of Ilorin, Nigeria
www.njpas.com.ng

Mathematical Modeling and Bifurcation Analysis of Hepatitis E Virus Genotypes 1 and 2 Transmission with Asymptomatic Carriers

Robert Folorunsho Akerejola

Department of Mathematics, Edo State University, Iyamho, Edo State, Nigeria.

Date Received: 20-11-2025
Date Accepted: 26-01-2026
DOI: https://doi.org/10.48198/NJPAS/25.B43

ABSTRACT

Hepatitis E virus (HEV) continues to be a major public health concern, especially in low- and middle-income nations, where genotypes 1 and 2 are prevalent. These genotypes mainly spread through the fecal–oral route, with asymptomatic carriers playing a crucial yet often overlooked role in maintaining transmission. This study employs a deterministic mathematical model to examine the transmission dynamics of HEV genotypes 1 and 2, considering asymptomatic carriers and environmental reservoirs. The invariant region, where the model is both mathematically and biologically well-posed, is derived. The equilibrium-free point is established, and the next-generation matrix approach is used to compute the basic reproduction number. The analysis of the basic reproduction number indicates that, in the absence of the asymptomatic infectious class, the basic reproduction number decreases, suggesting that the asymptomatic class contributes to the transmission dynamics of HEV genotype 1 and 2. The disease-free equilibrium point is confirmed to be locally and globally asymptotically stable if the basic reproduction number falls below unity. The nature of the bifurcation was investigated through the application of the center manifold theory. The overall findings emphasize the importance of considering asymptomatic infections in HEV models and provide insights for the development of effective intervention strategies for controlling infections caused by hepatitis E virus genotypes 1 and 2.

Keywords: Hepatitis E Virus, Asymptomatic, Mathematical Model, Genotypes 1 and 2

Introduction

The scientific community has shown increasing interest in the single-stranded RNA virus known as Hepatitis E Virus (HEV), as it causes acute viral hepatitis infections worldwide (Kamar et al., 2020). The two genotypes that infect humans, HEV-1 and HEV-2 are primarily transmitted via the fecal-oral route in settings with poor sanitation and are most common in resource-limited nations. (Pallerla *et al.,* 2020; Hoa et al., 2021). The World Health Organization reports that 20 million people contract HEV annually, resulting in 3.3% of all viral infection-related deaths worldwide (Songtanin et al., 2023). The incubation period for hepatitis E infection typically ranges from 2 to 8 weeks, with an average of approximately 5 weeks. Fatigue, loss of appetite, nausea, vomiting, stomach discomfort, jaundice (yellowing of the skin and eyes), dark urine, and general malaise are common symptoms of hepatitis E infection (World Health Organization, 2025).

Asymptomatic carriers, which often go undetected, play a critical role in the burden of Hepatitis E dynamics and may act as reservoirs for HEV, especially in endemic areas. Accordingly, asymptomatic Hepatitis E carriers contribute to the spread of HEV within their local environment, resulting in the continuous spread of the hepatitis E virus (Primadharsini et al.,

Corresponding Author: **Robert Folorunsho Akerejola**
Department of Basic Sciences, Auchi polytechnic, Auchi, Edo State, Nigeria.
Email: rfakerejola@gmail.com Phone: +2348131996067

©2026 Creative Common License Attribution 4.0 International

2021). The presence of asymptomatic carriers hinders both outbreak control and public health intervention strategies (Tene et al., 2025). The clinical importance of these carriers remains high because they spread the virus without showing any symptoms. The situation becomes more complex because immunocompromised people who maintain persistent HEV infections face an elevated risk of developing chronic diseases (Primadharsini et al., 2021; Janahi et al., 2020). The identification of these carriers through enhanced surveillance methods becomes essential because it will help develop better public health strategies and intervention plans.

The current understanding of HEV epidemiology has led to several important discoveries; however, researchers still need to develop more accurate mathematical models for studying HEV transmission patterns. The development of new modeling techniques that incorporate asymptomatic carriers into epidemiological studies of hepatitis E genotypes 1 and 2 becomes essential, as it will improve predictive models and enable more targeted intervention strategies.

The existing literature reveals that researchers have developed different mathematical models to study HEV transmission; the research by Nannyonga et al. (2012) developed compartmental model to study HEV transmission during the Kitgum Uganda outbreak by integrating environmental contamination as a fundamental transmission factor. The research demonstrated that inadequate sanitation practices, combined with contaminated water sources, contributed to the spread of the disease. The research established essential connections between environmental reservoirs and infection force, which showed that better sanitation practices would decrease both basic reproduction numbers and outbreak sizes.

The research of Alzahrani et al. (2018) built upon previous work by developing an ODE-based HEV model, which they enhanced through optimal control theory implementation. The researchers added three intervention methods to their model, which included hygiene improvement, case management, and treatment protocols. The authors employed mathematical methods to demonstrate how various intervention approaches impact disease spread and associated costs. The authors established that implementing hygiene practices together with case treatment produced better results than single intervention strategies, while the timing of implementation proved essential for success.

The research by Ren et al. (2013) used time-series models to forecast HEV cases in Shanghai while accounting for periodic patterns in disease outbreaks. They combined traditional statistical methods with modern machine learning approaches through hybrid statistical–mechanistic. They concluded that the accuracy of forecasting depends on the quality and resolution of surveillance data, as these methods help create preparedness systems and warning systems.

However, most of these models fail to distinguish between different genotypes, which limit their usefulness in specific epidemiological settings. The modeling requirements for genotypes 1 and 2 differ from those of genotypes 3 and 4 because the former spread through waterborne transmission among humans, while the latter transmit between animals and humans. The distinct transmission patterns and risk elements of genotypes 1 and 2 necessitate separate methods for studying their epidemiological behavior.

So, this research seeks to formulate a mathematical model that incorporates asymptomatic carriers and study the transmission patterns of HEV genotypes 1 and 2. The model works to enhance population-based and environmental transmission assessments, which will lead to better public health strategies for HEV genotypes 1 and 2 outbreak prevention. The research findings will identify essential thresholds that determine the continuation or termination of HEV transmission, supporting risk management and assessment activities.

2.0 Materials and Method

Model Formulation:

This model divides the entire human population at any given time t, represented by N(t), into four (4) subpopulations: susceptible humans, $S(t)$, exposed humans, $E(t)$, infectious humans, $I(t)$, and recovered humans, $R(t)$. The infectious

humans' population $I(t)$ is further divided into two mutually disjoint sub-populations: symptomatic infectious human population, $I_s(t)$ and asymptomatic infectious human population, $I_a(t)$. Thus, the entire human population:

$$N(t)=S(t)+E(t)+I_s(t)+I_a(t)+R(t) \qquad (A)$$

The total Hepatitis E Virus concentration in the environment at any time t is represented by $V(t)$. We assume that susceptible humans, $S(t)$, are infected with HEV either from contaminated environment (food, water, drinks, e.t.c) or through contact with infectious individuals at transmission rates respectively given as : $\lambda_1=\frac{\beta_3 V}{k+V}$, $\lambda_2=\frac{\beta_1 I_s+\beta_2 I_a}{N}$. Here, parameters β_1 and β_2 denote the probability that a susceptible human is infected during contact with either a symptomatic infectious human or an asymptomatic infectious human respectively, and β_3 is the probability that a susceptible human is infected during contact with a contaminated environment. k represents the concentration of Hepatitis E Virus in the environment which gives 50% chance of getting infected.

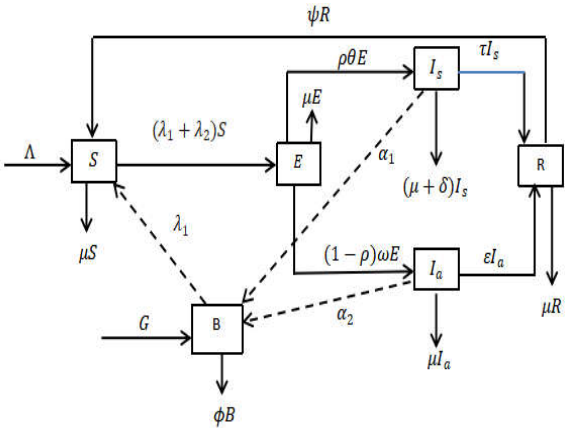

Figure 1: Model flowchart illustrating the transmission dynamics of HEV

Table 1: Description of Model Parameters

Parameters	Descriptions
Λ	Recruitment rate of human population
μ	Per capita death rate of human
β_1	Probability that a susceptible human is infected during contact with symptomatic infectious human
β_2	Probability that a susceptible human is infected during contact with an asymptomatic infectious human
β_3	Probability that a susceptible human is infected during contact with contaminated environment
k	Concentration of virus (virions) in the environment which gives 50% chance of getting infected
δ	Rate of disease–induced death of humans per capita
ψ	Rate of loss of immunity in humans per capita
θ	The rate of progression per capita of individuals from an exposed state to a symptomatic infectious state
ω	The rate of progression per capita of individuals from an exposed state to asymptomatic infectious state
τ	Recovery rate per capita of individuals from a symptomatic infectious state to a recovered state
ε	Recovery rate per capita of individuals from asymptomatic infectious state to a recovered state
α_1	Per capita rate of HEV contribution from symptomatic infectious humans to the environment
α_2	Per capita rate of HEV contribution from asymptomatic infectious humans to the environment
ϕ	Per capita rate of HEV decay
ρ	Proportion of infected humans who move to the symptomatic class

From the model flowchart of the disease transmission depicted in Fig. 1, we derive the following nonlinear system of ordinary differential equations;

$$\left.\begin{aligned}\frac{dS}{dt}&=\Lambda+\psi R-(\lambda_1+\lambda_2+\mu)S\\ \frac{dE}{dt}&=(\lambda_1+\lambda_2)S-(\theta+\mu)E\\ \frac{dI_s}{dt}&=\rho\theta E-(\tau+\mu+\delta)I_s\\ \frac{dI_a}{dt}&=(1-\rho)\theta E-(\varepsilon+\mu)I_a\\ \frac{dR}{dt}&=\tau I_s+\varepsilon I_a-(\psi+\mu)R\\ \frac{dV}{dt}&=\alpha_1 I_s+\alpha_2 I_a-\phi V\end{aligned}\right\} \quad (1)$$

where $\lambda_1=\frac{\beta_3 V}{k+V}$ $\lambda_2=\frac{\beta_1 I_s+\beta_2 I_a}{N}$

with the following initial conditions;

$S(0)>0,\ E(0)\geq 0,\ I_s(0)>0,\ I_a(0)\geq 0,\ R(0)\geq 0,\ V(0)>0 \quad (2)$

Invariant Region and Positivity of Solutions

Theorem 1: The model system (1) includes solutions that are found within the feasible region $\Omega=\Omega_H\times\Omega_V$, where

$\Omega_H=\left\{(S, E, I_s, I_a, R)\in \mathrm{R}_+^5 : N(t)\leq\frac{\Lambda}{\mu}\right\}$, and

$\Omega_V=\left\{V\in \mathrm{R}_+ : V(t)\leq\frac{\Lambda(\alpha_1+\alpha_2)}{\mu\phi}\right\}$, are respectively subset for the human and HEV population.

Proof

From the differential equations (1), we have: $\frac{dN}{dt}=\Lambda-\mu N-\delta I_s$

In the absence of the disease ($\delta=0$);

$$\frac{dN}{dt}\leq\Lambda-\mu N \quad (3)$$

Using the method of integrating factors at $N(0)=N_0$, equation (3) becomes;

$$N(t)\leq\frac{\Lambda}{\mu}+\left(N_0-\frac{\Lambda}{\mu}\right)e^{-\mu t} \quad (4)$$

$N(t)\leq\frac{\Lambda}{\mu}$ as $t\to\infty$ in equation (4), suggesting that the feasible solution set of the human population are contained in the region,

$\Omega_H=\left\{(S, E, I_s, I_a, R)\in \mathrm{R}_+^5 : N(t)\leq\frac{\Lambda}{\mu}\right\}$.

Observe that $I_s(t)+I_a(t)\leq N(t)\leq\frac{\Lambda}{\mu}$, therefore, the last equation of system (1) can be expressed as;

$$\frac{dV(t)}{dt}\leq\frac{\Lambda}{\mu}(\alpha_1+\alpha_2)-\phi V \quad (5)$$

Employing the method of integrating factor at $V(0)=V_0$, equation (5) becomes;

$$V(t)\leq\frac{\Lambda(\alpha_1+\alpha_2)}{\mu\phi}+\left(V_0-\frac{\Lambda(\alpha_1+\alpha_2)}{\mu\phi}\right)e^{-\phi t} \quad (6)$$

as $t\to\infty$ in equation (6), $V(t)\leq\frac{\Lambda(\alpha_1+\alpha_2)}{\mu\phi}$. Thus, the feasible solution set for the HEV population falls in the region, $\Omega_V=\left\{V\in \mathrm{R}_+ : V(t)\leq\frac{\Lambda(\alpha_1+\alpha_2)}{\mu\phi}\right\}$. Therefore, all feasible solution set of model (1) enters the region $\Omega=\Omega_H\times\Omega_V$. Hence, Ω is positively invariant and system (1) is biologically meaningful and also mathematically well-posed in Ω.

Theorem 2: Let the initial conditions be

$\{S(0)>0,\ E(0)\geq 0,\ I_s(0)>0,\ I_a(0)\geq 0,\ R(0)\geq 0,\ V(0)>0\}\in\Omega$, then the solution set $\{S, E, I_s, I_a, R, V\}(t)$ of the model equations (1) is positive for all $t\geq 0$.

Proof

Considering the first equation of system (1)

$\frac{dS}{dt}=\Lambda+\psi R-(\lambda_1+\lambda_2+\mu)S$

where $\lambda_1=\frac{\beta_3 V}{k+V}$ $\lambda_2=\frac{\beta_1 I_s+\beta_2 I_a}{N}$

$$\frac{dS}{dt}\geq-(\lambda_1+\lambda_2+\mu)S \quad (7)$$

Solving equation (7) at $t=0$ gives;

$$S(t)\geq S(0)e^{[-\int(\lambda_1+\lambda_2)dt+\mu t]}\geq 0, \quad (8)$$

since $e^x>0\ \forall\ x\in\mathrm{R}$

Similarly, from the second equation of model system (1), that is;

$\frac{dE}{dt}=(\lambda_1+\lambda_2)S-(\theta+\mu)E$, which implies that;

$$\frac{dE}{dt}\geq-(\theta+\mu)E \quad (9)$$

Solving equation (9) at $t=0$ yields;

$$E(t)\geq E(0)e^{-(\theta+\mu)t}\geq 0 \quad (10)$$

It can be shown, following the above procedure that the solutions of the remaining equations of the system (1) stay positive for all $t\geq 0$. Hence, the proof.

Disease-Free Equilibrium (DFE) and Basic Reproduction Number, R_0

The disease-free equilibrium state is denoted by E_0 is when all infected and infectious states are equal to zero and is computed by setting the right-

hand side of model system (1) to zero. Thus, the corresponding disease-free equilibrium point is:

$$E_0=(S^*,\ E^*,\ I_s^*,\ I_a^*,\ R^*\ V^*)=\left(\frac{\Lambda}{\mu},\ 0,\ 0,\ 0,\ 0,\ 0\right) \quad (11)$$

The basic reproduction number given by R_0 is a threshold parameter used in epidemiology to study the behavior of mathematical models. It denotes the average number of secondary infections produced by a single infectious individual within a fully susceptible population at any given time t. Mathematically, it is defined as $R_0=\rho(A)$, which refers to the spectral radius of matrix A (Elakhe et al., 2023). Here, matrix $A=FV^1$, where $F=\frac{\partial F_i(E_0)}{\partial x_i}$ implies transmission matrix and $V=\frac{\partial V_i(E_0)}{\partial x_i}$ denotes the transition matrix, both obtained at disease-free equilibrium, E_0. F_i denotes the appearance rate of new infections in compartments i while V_i represents the transfer rate of infections from and/or into compartment i by all other means. Thus,

$$F=\begin{pmatrix}0 & \beta_1 & \beta_2 & \frac{\beta_3\Lambda}{k\mu}\\ 0 & 0 & 0 & 0\\ 0 & 0 & 0 & 0\\ 0 & 0 & 0 & 0\end{pmatrix} \quad \text{and}$$

$$V=\begin{pmatrix}(\theta+\omega+\mu) & 0 & 0 & 0\\ -\rho\theta & (\tau+\mu+\delta) & 0 & 0\\ -(1-\rho)\theta & 0 & (\varepsilon+\mu) & 0\\ 0 & -\alpha_1 & -\alpha_2 & \phi\end{pmatrix}$$

Hence, the basic reproduction number R_0 for model (1) is expressed as;

$$R_0=\rho\left(FV^1\right) \quad (12)$$

$$=\frac{\beta_1\rho\theta}{(\theta+\mu)(\tau+\mu+\delta)}+\frac{\beta_2(1-\rho)\theta}{(\theta+\mu)(\varepsilon+\mu)}+\frac{\beta_3\Lambda}{k\mu\phi}\left[\frac{\rho\theta\alpha_1}{(\theta+\mu)(\tau+\mu+\delta)}+\frac{(1-\rho)\theta\alpha_2}{(\theta+\mu)(\varepsilon+\mu)}\right]$$

Suppose;

$$R_{01}=\frac{\beta_1\rho\theta}{(\theta+\mu)(\tau+\mu+\delta)},$$

$$R_{03}=\frac{\beta_3\Lambda}{k\mu\phi}\left[\frac{\rho\theta\alpha_1}{(\theta+\mu)(\tau+\mu+\delta)}+\frac{(1-\rho)\theta\alpha_2}{(\theta+\mu)(\varepsilon+\mu)}\right]$$

$$R_{02}=\frac{\beta_2(1-\rho)\theta}{(\theta+\mu)(\varepsilon+\mu)}$$

Then, equation (12) simplifies to:

$$R_0=R_{01}+R_{02}+R_{03} \quad (13)$$

Here, R_{01} denotes average secondary infections caused by symptomatic cases with high viral shedding in stool, R_{02} represents average new infections caused by individuals who never show symptoms but still excrete HEV RNA in feces, while R_{03} implies the average secondary infections produced indirectly through the environment viral pool.

Stability of the Disease-Free Equilibrium

Theorem 3: The disease-free equilibrium, E_0 for model (1) is locally asymptotically stable (LAS) if $R_0<1$, and unstable if $R_0>1$.

Proof

The Jacobian matrix of model (1) evaluated at the disease-free equilibrium, E_0 denoted by $J_0[E_0]$ is given as:

$$J_0[E_0]=\begin{pmatrix}-\mu & 0 & -\beta_1 & -\beta_2 & \psi & -\frac{\beta_3\Lambda}{k\mu}\\ 0 & -(\theta+\mu) & \beta_1 & \beta_2 & 0 & \frac{\beta_3\Lambda}{k\mu}\\ 0 & \rho\theta & -(\tau+\mu+\delta) & 0 & 0 & 0\\ 0 & (1-\rho)\theta & 0 & -(\varepsilon+\mu) & 0 & 0\\ 0 & 0 & \tau & \varepsilon & -(\psi+\mu) & 0\\ 0 & 0 & \alpha_1 & \alpha_2 & 0 & -\phi\end{pmatrix}$$

We need to show that all the eigenvalues of $J_0[E_0]$ have negative real parts. The first column of $J_0[E_0]$ contains only the diagonal term, $-\mu$, which form the first eigenvalue. Therefore,

$$J_1[E_0]=\begin{pmatrix}-(\theta+\mu) & \beta_1 & \beta_2 & 0 & \frac{\beta_3\Lambda}{k\mu}\\ \rho\theta & -(\tau+\mu+\delta) & 0 & 0 & 0\\ (1-\rho)\theta & 0 & -(\varepsilon+\mu) & 0 & 0\\ 0 & \tau & \varepsilon & -(\psi+\mu) & 0\\ 0 & \alpha_1 & \alpha_2 & 0 & -\phi\end{pmatrix}$$

Similarly, the fourth column of $J_1[E_0]$ contains only the diagonal term, $-(\psi+\mu)$, which forms a negative eigenvalue. Hence;

$$J_2[E_0]=\begin{pmatrix}-(\theta+\mu) & \beta_1 & \beta_2 & \frac{\beta_3\Lambda}{k\mu}\\ \rho\theta & -(\tau+\mu+\delta) & 0 & 0\\ (1-\rho)\theta & 0 & -(\varepsilon+\mu) & 0\\ 0 & \alpha_1 & \alpha_2 & -\phi\end{pmatrix}$$

The remaining eigenvalues are obtained from the sub–matrix $J_2[E_0]$. Obviously, the eigenvalues of

the matrix $J_2[E_0]$ are the roots of the characteristic equation:

$$|J_2[E_0]-\lambda I|=0 \quad (14)$$

That is;

$$\begin{vmatrix} -(\theta+\mu)-\lambda & \beta_1 & \beta_2 & \frac{\beta_3\Lambda}{k\mu} \\ \rho\theta & -(\tau+\mu+\delta)-\lambda & 0 & 0 \\ (1-p)\theta & 0 & -(\varepsilon+\mu)-\lambda & 0 \\ 0 & \alpha_1 & \alpha_2 & -\phi-\lambda \end{vmatrix}=0 \quad (15)$$

Let $a_1=(\theta+\mu)$, $a_2=(\tau+\mu+\delta)$, $a_3=(\varepsilon+\mu)$, $a_4=\phi$,

$a_5=a_6=\beta_2$, $a_7=\frac{\beta\Lambda}{k\mu}$, $a_8=\rho\theta$, $a_9=(1-\rho)\theta$, $a_{10}=\alpha_1$, $a_{11}=\alpha_2$

Equation (15) reduces to;

$$A_0\lambda^4+A_1\lambda^3+A_2\lambda^2+A_3\lambda+A_4=0 \quad (16)$$

where;

$A_0=1$

$A_1=a_1+a_2+a_3+a_4$

$A_2=a_1a_2+a_1a_3+a_1a_4+a_2a_3+a_2a_4+a_3a_4-a_5a_8-a_6a_9$

$A_3=a_1a_2a_3+a_1a_2a_4+a_1a_3a_4+a_2a_3a_4-(a_2a_6a_9+a_3a_5a_8)-(a_4a_5a_8+a_7a_8a_{10})-(a_4a_6a_9+a_7a_9a_{11})$

$A_4=a_1a_2a_3a_4-a_2a_4a_6a_9-a_3a_4a_5a_8-a_3a_7a_8a_{10}-a_2a_7a_9a_{11}$

$A_4=a_1a_2a_3a_4\left[1-\left(\frac{a_2a_4a_6a_9+a_3a_4a_5a_8+a_3a_7a_8a_{10}+a_2a_7a_9a_{11}}{a_1a_2a_3a_4}\right)\right]$

In terms of R_0, further simplification of A_4 yields;

$$A_4=a_1a_2a_3a_4[1-R_0] \quad (17)$$

The expression for R_0 in terms of a_{is} can be written as;

$$R_0=\frac{a_2a_4a_6a_9+a_3a_4a_5a_8+a_3a_7a_8a_{10}+a_2a_7a_9a_{11}}{a_1a_2a_3a_4}$$

Obviously, $A_4>0$ if and only if $R_0<1$, which implies that;

$$a_1a_2a_3a_4>a_2a_4a_6a_9+a_3a_4a_5a_8+a_3a_7a_8a_{10}+a_2a_7a_9a_{11} \quad (18)$$

From (18), we have;

$$\left.\begin{array}{c} a_1a_2>a_5a_8 \\ a_1a_3>a_6a_9 \\ a_1a_2a_3>a_2a_6a_9+a_3a_5a_8 \\ a_1a_2a_4>a_4a_5a_8+a_7a_8a_{10} \\ a_1a_3a_4>a_4a_6a_9+a_7a_9a_{11} \end{array}\right\} \quad (19)$$

By the inequalities in equation (19), it follows that $A_2, A_3>0$, hence $A_i>0$ for $i=0, 1, 2, 3, 4$ since all a_{is} are positive. To demonstrate that every root of equation (16) possesses negative real parts, we employ the Routh-Hurwitz criterion. This criterion asserts that all roots of the polynomial (16) will have negative real parts if and only if the coefficients A_i, where $i= 0, 1, 2, 3, 4$, and the determinants of the matrices H_i, for $i = 0, 1, 2, 3, 4$, are all positive. Using Lienard-Chipart criteria, we only need to show that $|H_3|>0$ (see Daud, 2021), and it can be shown that for $R_0<1$, $|H_3|=a_1a_2a_3-a_3^2+a_1^2a_4>0$. Consequently, all the roots of the characteristic polynomial equation (16) possess negative real parts, indicating that the disease-free equilibrium point is locally asymptotically stable when $R_0<1$. Conversely, if $R_0>1$, and applying Descartes' rule of signs, we note the presence of a positive eigenvalue, which indicates that the disease-free equilibrium point will be unstable.

Theorem 4: The disease-free equilibrium, E_0 for model system (1) is globally asymptotically stable (GAS) if $R_0\leq1$, and unstable otherwise.

Proof

The global asymptotic stability for a special case ($\delta_h=0$ and $\psi=0$) of the disease-free equilibrium of model (1) is established by decomposing the model system (1) into uninfected and infected components, following the method in Castillo-Chavez et al, (2002), Collins and Duffy, (2022). This decomposition allows for the analysis of the limiting behavior of the uninfected subsystem independently and then show that the infected subsystem is dominated by a linear system whose dynamics are governed by an M-matrix, thereby ensuring that infection variables decay to zero whenever $R_0<1$. Biologically, this approach formalizes the idea that if the uninfected population converges to a stable equilibrium and the infected classes cannot sustain themselves in that environment, then the disease will be eliminated regardless of initial infection levels.

Thus, model system (1) is transformed as follows:

$$\frac{dP_1}{dt}=Y_1(P_1,P_2) \quad (20)$$

$$\frac{dP_2}{dt}=Y_2(P_1,P_2), \qquad Y_2(P_1,0)=0 \quad (21)$$

where the components of $P_1\in R^2$ represent the uninfected population and the components of

$P_2 \in R^4$ represent the infected population. The disease-free equilibrium point of model system (1) is expressed as $E_0=(P_1^0,0)$. The fixed point $E_0=(P_1^0,0)$ is globally asymptotically stable equilibrium for system (1) given that $R_0 \leq 1$ and the below criteria are satisfied.

(H1) Given $\frac{dP_1}{dt}=Y_1(P_1,0)$, P_1^0 is globally asymptotically stable

(H2) $Y_2(P_1,P_2)=MP_2-\widehat{Y_2}(P_1,P_2)$, $\widehat{Y_2}(P_1,P_2) \geq 0$ for $(P_1,P_2) \in \Omega$

where the Jacobian $M=\frac{\partial Y_2}{\partial P_2}(P_1,0)$ is an M-matrix (the off-diagonal elements of M are non-negative) and Ω is a positively invariant attracting domain.

From the model system (1), we have that;

$$\frac{dP_1}{dt}=Y_1(P_1,0)=\begin{bmatrix}\Lambda_h-\mu S\\ -\mu R\end{bmatrix} \quad (22)$$

From equation (22), observe that $Y_1(P_1,0)$ is a system of linear Ordinary Differential Equations (ODEs) and finding a solution yields;

$$\left.\begin{aligned} S(t)&=\frac{\Lambda}{\mu}+C_1 e^{-\mu t}\\ R(t)&=C_2 e^{-\mu t}\end{aligned}\right\} \quad (23)$$

where C_1 and C_2 are constants, thus, $(S(t),\ R(t)) \to \left(\frac{\Lambda}{\mu},\ 0\right)$ as $t \to \infty$. Hence P_1^0 is globally asymptotically stable, which verifies the first condition (H1).

Next, we show that the second condition (H2) holds. From model system (1), we have that;

$$Y_2(P_1,P_2)=\begin{bmatrix}\left(\frac{\beta_3 V}{k+V}+\frac{\beta_1 I_s+\beta_2 I_a}{N}\right)S-(\theta+\mu)E\\ \rho\theta E-(\tau+\mu+\delta)I_s\\ (1-\rho)\theta E-(\varepsilon+\mu)I_a\\ \alpha_1 I_s+\alpha_2 I_a-\phi B\end{bmatrix}=MP_2-\widehat{Y_2}(P_1,P_2) \quad (24)$$

where

$$M=\begin{pmatrix}-(\theta+\mu) & \beta_1 & \beta_2 & \frac{\beta_3 \Lambda}{k\mu}\\ \rho\theta & -(\tau+\mu+\delta) & 0 & 0\\ (1-\rho)\theta & 0 & -(\varepsilon+\mu) & 0\\ 0 & \alpha_1 & \alpha_2 & -\phi\end{pmatrix},$$

$$P_2=\begin{pmatrix}E\\ I_s\\ I_a\\ V\end{pmatrix}$$

and

$$\widehat{Y_2}(P_1,P_2)=\begin{pmatrix}\frac{\beta_3 \Lambda V}{k\mu}\left[1-\frac{k}{k+V}\right]+\beta_1 I_s\left[1-\frac{S}{N}\right]+\beta_2 I_a\left[1-\frac{S}{N}\right]\\ 0\\ 0\\ 0\end{pmatrix}$$

Since, $\frac{k}{k+V} \leq 1$ and $\frac{S}{N} \leq 1$ it implies that $\widehat{Y_2}(P_1,P_2) \geq 0$. Clearly, matrix M is an M-matrix with the off-diagonal entries positive, which satisfies the second condition (H2). Hence, the disease-free equilibrium E_0 is globally asymptotically stable if $R_0 \leq 1$ and unstable otherwise.

Bifurcation Analysis

We consider model system (1), and use the center manifold theory approach introduced by Castillo-Chavez & Song (2004) to investigate the nature of the bifurcation involving the disease-free equilibrium point E_0 at $R_0=1$ for the special case $\psi=0$.

From the model (1) above; Let $S=x_1$, $E=x_2$, $I_s=x_3$, $I_a=x_4$, $R=x_5$, and $V=x_6$, we have;

$$\left.\begin{aligned} h_1&=\frac{dx_1}{dt}=\Lambda-(\lambda_1+\lambda_2+\mu)x_1\\ h_2&=\frac{dx_2}{dt}=(\lambda_1+\lambda_2)x_1-(\theta+\mu)x_2\\ h_3&=\frac{dx_3}{dt}=\rho\theta x_2-(\tau+\mu+\delta)x_3\\ h_4&=\frac{dx_4}{dt}=(1-\rho)\theta x_2-(\varepsilon+\mu)x_4\\ h_5&=\frac{dx_5}{dt}=\tau x_3+\varepsilon x_4-\mu x_5\\ h_6&=\frac{dx_6}{dt}=\alpha_1 x_3+\alpha_2 x_4-\phi x_6\end{aligned}\right\} \quad (25)$$

where $\lambda_1=\frac{\lambda\beta_3 x_6}{k+x_6}$ $\lambda_2=\frac{\lambda\beta_1 x_3+\lambda\beta_2 x_4}{N}$

then scaling the transmission parameters, we have;

$$R_0(\lambda)=\frac{\lambda[\beta_1\rho\theta k\mu\phi(\varepsilon+\mu)+\beta_2(1-\rho)\theta k\mu\phi(\tau+\mu+\delta)+\beta_3\Lambda[\rho\theta\alpha_1(\varepsilon+\mu)+(1-\rho)\theta\alpha_2(\tau+\mu+\delta)]]}{k\mu\phi(\theta+\mu)(\tau+\mu+\delta)(\varepsilon+\mu)}$$

Let $Z_1=(\theta+\mu)$, $Z_2=(\tau+\mu+\delta)$, and $Z_3=(\varepsilon+\mu)$, then;

$$R_0(\lambda)=\frac{\lambda[\beta_1\rho\theta k\mu\phi Z_3+\beta_2(1-\rho)\theta k\mu\phi Z_2+\beta_3\Lambda[\rho\theta\alpha_1 Z_3+(1-\rho)\theta\alpha_2 Z_2]]}{k\mu\phi Z_1 Z_2 Z_3}$$

let $\lambda=\lambda^*$ be the bifurcation parameter, at $R_0=1$. The parameter λ is chosen as the bifurcation parameter because it scales the force of infection and represents the overall transmission intensity in the population, capturing changes in contact

patterns, exposure risk, and control interventions. Hence, we have;

$$\lambda^*=\frac{k\mu\phi Z_1Z_2Z_3}{\beta_1\rho\theta k\mu\phi Z_3+\beta_2(1-\rho)\theta k\mu\phi Z_2+\beta_3\Lambda[\rho\theta\alpha_1Z_3+(1-\rho)\theta\alpha_2Z_2]}$$

The Jacobian Matrix of model (1) at disease-free equilibrium is expressed as;

$$J[E_0,\lambda^*]=\begin{pmatrix}-\mu & 0 & -\lambda^*\beta_1 & -\lambda^*\beta_2 & 0 & -\frac{\lambda^*\beta_3\Lambda}{k\mu}\\ 0 & -Z_1 & \lambda^*\beta_1 & \lambda^*\beta_2 & 0 & \frac{\lambda^*\beta_3\Lambda}{k\mu}\\ 0 & \rho\theta & -Z_2 & 0 & 0 & 0\\ 0 & (1-\rho)\theta & 0 & -Z_3 & 0 & 0\\ 0 & 0 & \tau & \varepsilon & -\mu & 0\\ 0 & 0 & \alpha_1 & \alpha_2 & 0 & -\phi\end{pmatrix}$$

Let the right and left components of the eigenvectors of matrix $J[E_0,\lambda^*]$ associated with the zero eigenvalue be respectively given as $P=(p_1,p_2,p_3,p_4,p_5,p_6)^T$ and $Q=(q_1,q_2,q_3,q_4,q_5,q_6)$, then considering the equation $J[E_0,\lambda^*].P=0$, we have;

$$\left.\begin{array}{c}-\mu p_1-\lambda^*\beta_1p_3-\lambda^*\beta_2p_4-\frac{\lambda^*\beta_3\Lambda}{k\mu}p_6=0\\ -Z_1p_2+\lambda^*\beta_1p_3+\lambda^*\beta_2p_4+\frac{\lambda^*\beta_3\Lambda}{k\mu}p_6=0\\ \rho\theta p_2-Z_2p_3=0\\ (1-\rho)\theta p_3-Z_3p_4=0\\ \tau p_3+\varepsilon p_4-\mu p_5=0\\ \alpha_1p_3+\alpha_2p_4-\phi p_6=0\end{array}\right\} \quad (26)$$

From equation (26), we have the right eigenvectors corresponding to zero eigenvalue as;

$$\left.\begin{array}{l}p_1=-\frac{1}{\mu}\left[v_6+\frac{\beta_3\Lambda}{k\mu}v_5\right]p_2<0\\ p_2=p_2>0\\ p_3=\frac{\rho\theta}{Z_2}p_2>0\\ p_4=\frac{(1-\rho)\theta}{Z_3}p_2>0\\ p_5=\left[\frac{\tau\rho\theta Z_3+(1-\rho)\theta\varepsilon Z_2}{\mu Z_2Z_3}\right]p_2>0\\ p_6=v_5p_2>0\end{array}\right\} \quad (27)$$

where;

$$v_5=\frac{\rho\theta\alpha_1Z_3+(1-\rho)\theta\alpha_2Z_2}{\phi Z_2Z_3} \quad and \quad v_6=\frac{(\beta_1\rho\theta Z_3+\beta}{Z_2}$$

Similarly, by considering the equation $Q.J[E_0,\lambda^*]=0$, we have;

$$\left.\begin{array}{c}-\mu q_1=0\\ -Z_1q_2+\rho\theta q_3+(1-\rho)\theta q_4=0\\ -\lambda^*\beta_1q_1+\lambda^*\beta_1q_2-Z_2q_3+\tau q_5+\alpha_1q_6=0\\ -\lambda^*\beta_2q_1+\lambda^*\beta_2q_2-Z_3q_4+\varepsilon q_5+\alpha_2q_6=0\\ -\mu q_5=0\\ -\frac{\lambda^*\beta_3\Lambda}{k\mu}q_1+\frac{\lambda^*\beta_3\Lambda}{k\mu}q_2-\phi q_6=0\end{array}\right\} \quad (28)$$

From equation (28), we have the left eigenvectors corresponding to zero eigenvalue as;

$$\left.\begin{array}{l}q_1=q_5=0\\ q_2=q_2>0\\ q_3=\frac{\lambda^*}{Z_2}\left[\frac{\beta_3\Lambda\alpha_1}{k\mu\phi}+\beta_1\right]q_2>0\\ q_4=\frac{\lambda^*}{Z_3}\left[\frac{\beta_3\Lambda\alpha_1}{k\mu\phi}+\beta_1\right]q_2>0\\ q_6=\frac{\lambda^*\beta_3\Lambda}{k\mu\phi}q_2>0\end{array}\right\} \quad (29)$$

For model system (25), the corresponding non-zero partial derivatives of the right-hand side functions (h_i) are provided by;

$$\left.\begin{array}{c}\frac{\partial^2h_2}{\partial x_3\partial x_2}(x_{E_0},\lambda^*)=\frac{\partial^2h_2}{\partial x_3\partial x_5}(x_{E_0},\lambda^*)=-\frac{\lambda^*\beta_1\mu}{\Lambda}\\ \frac{\partial^2h_2}{\partial x_4\partial x_2}(x_{E_0},\lambda^*)=\frac{\partial^2h_2}{\partial x_4\partial x_5}(x_{E_0},\lambda^*)=-\frac{\lambda^*\beta_2\mu}{\Lambda}\\ \frac{\partial^2h_2}{\partial x_3\partial x_4}(x_{E_0},\lambda^*)=\frac{\partial^2h_2}{\partial x_4\partial x_3}(x_{E_0},\lambda^*)=-\frac{\lambda^*(\beta_1+\beta_2)\mu}{\Lambda}\\ \frac{\partial^2h_2}{\partial x_3^2}(x_{E_0},\lambda^*)=-\frac{2\lambda^*\beta_1\mu}{\Lambda}\\ \frac{\partial^2h_2}{\partial x_4^2}(x_{E_0},\lambda^*)=-\frac{2\lambda^*\beta_2\mu}{\Lambda}\\ \frac{\partial^2h_2}{\partial x_6^2}(x_{E_0},\lambda^*)=-\frac{2\lambda^*\beta_3\Lambda}{\mu k^2}\\ \frac{\partial^2h_2}{\partial x_6\partial x_1}(x_{E_0},\lambda^*)=\frac{\lambda^*\beta_3}{k}\\ \frac{\partial^2h_2}{\partial x_6\partial\lambda^*}(x_{E_0},\lambda^*)=\frac{\beta_3\Lambda}{\mu k}\\ \frac{\partial^2h_2}{\partial x_3\partial\lambda^*}(x_{E_0},\lambda^*)=\beta_1\\ \frac{\partial^2h_2}{\partial x_4\partial\lambda^*}(x_{E_0},\lambda^*)=\beta_2\end{array}\right\} \quad (30)$$

The bifurcation parameter 'a' according to Castillo-Chavez & Song (2004), is given as;

$$a=\sum_{k,i,j=1}^{n}q_kp_ip_j\frac{\partial^2f_k}{\partial x_i\partial x_j}(x_{E_0},\lambda^*)$$

Since $q_k=0$ for $k=1,5$ it follows that;

$$a=2q_2p_1p_6\frac{\partial^2h_2}{\partial x_1\partial x_6}(x_{E_0},\lambda^*)+q_2p_6^2\frac{\partial^2h_2}{\partial x_6^2}(x_{E_0},\lambda^*)+2q_2p_3p_2\frac{\partial^2h_2}{\partial x_3\partial x_2}(x_{E_0},\lambda^*)+$$
$$2q_2p_3p_4\frac{\partial^2h_2}{\partial x_3\partial x_4}(x_{E_0},\lambda^*)+2q_2p_3p_5\frac{\partial^2h_2}{\partial x_3\partial x_5}(x_{E_0},\lambda^*)+2q_2p_4p_2\frac{\partial^2h_2}{\partial x_4\partial x_2}(x_{E_0},\lambda^*)+$$
$$2q_2p_4p_5\frac{\partial^2h_2}{\partial x_4\partial x_5}(x_{E_0},\lambda^*)+q_2p_3^2\frac{\partial^2h_2}{\partial x_3^2}(x_{E_0},\lambda^*)+q_2p_4^2\frac{\partial^2h_2}{\partial x_4^2}(x_{E_0},\lambda^*) \quad (31)$$

Using equation (27), (29) and (30) then equation (31) simplifies to:

$$a=-2q_2p_2^2\lambda^*\left[\begin{array}{c}\frac{\beta_3v_5}{\mu k}\left(v_6+\frac{\beta_3\Lambda}{k\mu}v_5\right)+\frac{\beta_3\Lambda v_5^2}{\mu k^2}+\frac{\beta_1\mu\rho\theta}{\Lambda Z_2}+\frac{(\beta_1+\beta_2)\mu\rho(1-\rho)\theta^2}{\Lambda Z_2Z_3}+\\ \frac{\beta_1\rho\theta^2\mu}{\Lambda Z_2}\left(\frac{\tau\rho Z_3+(1-\rho)\varepsilon Z_2}{\mu Z_2Z_3}\right)+\frac{\beta_2\mu(1-\rho)\theta}{\Lambda Z_3}+\frac{\beta_2(1-\rho)\theta^2\mu}{\Lambda Z_3}\left(\frac{\tau\rho Z_3+(1-\rho)\varepsilon Z_2}{\mu Z_2Z_3}\right)+\\ \frac{\beta_1\mu(\rho\theta)^2}{\Lambda Z_2^2}+\frac{\beta_2\mu\left((1-\rho)\theta\right)^2}{\Lambda Z_3^2}\end{array}\right] \quad (32)$$

Similarly, the bifurcation parameter b is given as;

6125 $$b=\sum_{k,i=1}^{n} q_k p_i \frac{\partial^2 f_k}{\partial X_i \partial \beta^*}(X_{E_0}, \lambda^*)$$

Recall that $q_1=0$, therefore;

$$b=q_2\, p_3 \frac{\partial^2 h_2}{\partial X_3 \partial \lambda^*}(X_{E_0}, \lambda^*)+q_2\, p_4 \frac{\partial^2 h_2}{\partial X_4 \partial \lambda^*}(X_{E_0}, \lambda^*)+q_2\, p_6 \frac{\partial^2 h_2}{\partial X_6 \partial \lambda^*}(X_{E_0}, \lambda^*)$$

Using equation (27), (29), and (30), we have;

$$b=q_2 p_2\left[\frac{\beta_1 \rho \theta}{Z_2}+\frac{\beta_2(1-\rho)\theta}{Z_3}+\frac{v_5 \Lambda}{\mu k}\right]>0 \qquad (33)$$

Hence, the model system (1) will undergo a forward bifurcation at $R_0=1$ since $a<0$ and $b>0$.

3.0 Results and Discussion

The mathematical study of HEV transmission model elucidates the epidemiological factors of how HEV genotypes 1 and 2 persist in the human population. The basic reproduction number, R_0 given in equation (13) quantifies the impact of both direct human transmission (R_{01} and R_{02}) and the indirect environmental transmission (R_{03}). The asymptomatic term in R_0 , comprising the factors (1-ρ), β_2, and α_2 points out the significant role of asymptomatic, clinically undetected HEV virion excretors, whose sustained transmission potential makes environmental R_0 extremely high. Thus, a high value of R_0 indicates not only increased contact or shedding from symptomatic cases but also environmental contamination caused by asymptomatic carriers.

The local stability analysis of the disease-free equilibrium (DFE) shows that when $R_0<1$, all eigenvalues of the Jacobian matrix have negative real parts, suggesting that small introductions of infection, symptomatic or asymptomatic, will die out. Hence, the DFE is locally asymptotically stable, and the infection cannot invade the population. This aligns with the findings in epidemiology, which show that through improved sanitation, access to clean water, and decreased fecal contamination, progress can be made in keeping the effective reproduction number below one and preventing HEV outbreaks (Nannyonga et al., 2012).

The analysis of global stability adds more insight, particularly that the DFE remains globally asymptotically stable for $R_0<1$, which implies that regardless of the level of the initial infections, the disease will eventually be eliminated; and that the global result reinforces the local one, in that there can be an initially high environmental viral load and still the infection will disappear as long as $R_0<1$. From an epidemiological viewpoint, this shows that consistent community-level interventions that lower environmental contamination rates β_3 and enhance viral decay $\emptyset$ can eliminate HEV transmission.

The bifurcation analysis performed with $\psi=0$ (no loss of immunity) shows the existence of a forward (supercritical) bifurcation at $R_0=1$. This implies that as R_0 increases beyond unity, the DFE becomes unstable, and a unique stable endemic equilibrium appears, which persists alongside circulation of HEV in the community. In biological terms, this shift explains the transition from sporadic and imported cases of HEV to endemic levels of transmission, which is a situation often driven by poor sanitation and asymptomatic. However, the presence of a forward bifurcation shows that the disease dynamics are predictable and threshold-dependent, meaning that the coexistence of disease-free and endemic states when $R_0<1$ is impossible. Therefore, reducing R_0 to below unity is both necessary and sufficient for the elimination of HEV genotype 1 and 2.

Despite the insights provided by the model, certain limitations should be acknowledged. First, the model assumes homogeneous mixing of the population, which may not fully capture spatial heterogeneity or differences in contact patterns across communities. Second, all parameters are assumed to be constant in time, thereby neglecting seasonal effects, temporal variation in sanitation practices, and changes in behavioral responses during outbreaks. Finally, the progression from the exposed class to symptomatic and asymptomatic infectious states is simplified and does not explicitly account for age structure, immune status, or varying viral loads. These assumptions may limit the quantitative predictive power of the model, although they do not undermine the qualitative threshold and stability results presented.

4.0 Conclusion

This research work formulated and studied a deterministic continuous-time model of hepatitis E virus genotype 1 and 2, with asymptomatic carriers. The epidemiological feasible region, where the model is mathematically well-posed, has been established, and the basic reproduction number R_0 was explicitly derived utilizing the next generation matrix approach. We accessed the impact of asymptomatic carriers on the basic reproduction R_0, our analysis revealed that R_0 increases when there are asymptomatic persons capable of spreading the disease. Local stability analysis of disease-free equilibrium of the model was investigated and our investigation showed that the disease–free equilibrium of the model is locally asymptotically stable if $R_0<1$ and unstable when $R_0>1$. We also proved that the disease-free equilibrium of our model is globally asymptotically stable if $R_0\leq 1$ and unstable otherwise. The bifurcation analysis performed on the model system (1) with $\psi=0$ shows the existence of a forward bifurcation at $R_0=1$. These results demonstrate that control measures targeting the reduction of environmental viral load and suppression of asymptomatic transmission can reliably lead to complete HEV elimination. This research therefore recommends that apart from ensuring access to sustainable portable water and improved sanitation facilities, control programs must acknowledge that asymptomatic persons contribute significantly to the spread of the infection. So, routine community surveillance and early detection strategies should target both symptomatic and healthy populations through serological screening, thereby achieving eventual eradication of HEV genotypes 1 and 2.

Conflict of Interest

The author states that this paper has no conflict of interest.

References

Ali M. M., Gül M., Imran M., Ijaz M., Azeem S., Ullah A., and Yaqub H. M. F. (2024). Molecular identification and genotyping of hepatitis E virus from southern Punjab, Pakistan. *Scientific Reports, 14*(1).

Alzahrani E., Ouhadan A., and Balatif O. (2018). Dynamical analysis and optimal control of hepatitis E virus infection model. *Journal of Applied Mathematics, 2018*, 4267039.

Castillo-Chavez C., Feng Z., and Hung W. (2002). On the computation of R₀ and its role on global stability in Mathematical approaches foremerging and reemerging infectious diseases: An introduction. *Springer 125, pp. 229–250*.

Collins O. C., and Duffy K. J. (2022). A mathematical model of the dynamics and control of malaria in Nigeria. *Infectious Disease Modelling, 7*, 728–741.

Daud A. A. M. (2021). A note on Lienard–Chipart criteria and its application to epidemic models. *Mathematics and Statistics, 9*(1), 41–45.

Elakhe O. A., Isere A. O. and Akerejola R. F. (2023). Mathematical model of malaria transmission with anti-malarial herbal therapy as control. *African Journal of Mathematics and Statistics Studies, 6*(1), 1–16.

Hoa T. N., Munshi S. U., Ngoc K. N., Ngoc C. L., Thanh T. T. T., Akther T., Tabassum S., Parvin N., Baker S., and Rahman M. (2021). A tightly clustered hepatitis E virus genotype 1a is associated with endemic and outbreak infections in Bangladesh. *PLOS ONE, 16*(7).

Janahi E., Parkar S., Mustafa S., and Eisa Z. (2020). Implications of hepatitis E virus in blood transfusions, hemodialysis, and solid organ transplants. *Medicina, 56*(5), 206.

Jung S., Seo D., Yeo D., Wang Z., Min A., Zhao Z., Kim S., and Choi C. (2020). Experimental infection of hepatitis E virus induces pancreatic necroptosis in miniature pigs. *Scientific Reports, 10*(1).

Kamar N., Dalton H. R., Abravanel F., and Izopet J. (2020). Hepatitis E virus: Epidemiology, diagnosis, clinical manifestations, and treatment. *Journal of Hepatology, 72*(3), 546–558.

Khan A., Hammouch Z., and Baleanu D. (2019).

Modeling the dynamics of hepatitis E virus using Caputo and Atangana–Baleanu fractional derivatives. *Chaos, Solitons & Fractals, 122*, 119–126.

Liu Z., Chu R., Gong L., Su B., and Wu J. (2020). The assessment of transmission efficiency and latent infection period in asymptomatic carriers of SARS-CoV-2 infection. *International Journal of Infectious Diseases, 99*, 325–327.

Nannyonga B., Ssematimba A., and Mugisha J. Y. T. (2012). Modelling the dynamics of hepatitis E virus in an outbreak in Kitgum, Uganda. *Mathematical Biosciences, 240*(2), 148–155.

Pallerla S. R., Harms D., Johne, R., Tödt D., Steinmann, E., Schemmerer M., Wenzel J. J., Hofmann J., Shih J. W.-K., Wedemeyer H., Bock C.-T., and Velavan T. P. (2020). Hepatitis E virus infection: Circulation, molecular epidemiology, and impact on global health. *Pathogens, 9*(10), 856.

Pavio N., Doceul V., Bagdassarian E., and Johne R. (2017). Recent knowledge on hepatitis E virus in Suidae reservoirs and transmission routes to humans. *Veterinary Research, 48*(1), 78.

Priemer G., Cierniak F., Wolf C., Ulrich R. G.,Groschup M. H., and Eiden M. (2022). Co-circulation of different hepatitis E virus genotype 3 subtypes in pigs and wild boar in north-east Germany, 2019. *Pathogens, 11*(7), 773.

Primadharsini P., Nagashima S., and Okamoto H. (2021). Mechanism of cross-species transmission, adaptive evolution and pathogenesis of hepatitis E virus. *Viruses, 13*(5), 909.

Ren X., Wu P., Wang L., and Chen T. (2013). Modelling and forecasting of hepatitis E incidence in Shanghai, China. *Epidemiology and Infection, 141*(12), 2549–2559.

Seth A., and Sherman K. (2020). Hepatitis E: What we think we know. *Clinical Liver Disease, 15*(S1), S37–S44.

Shirazi,R., Pozzi P., Gozlan Y., Wax M., Lustig Y., Linial M., Mendelson E., Bardenstein S., and Mor O. (2021). Identification of hepatitis E virus genotypes 3 and 7 in Israel: A public health concern? *Viruses, 13*(11), 2326.

Songtanin B., Molehin A. J., Brittan K., Manatsathit W., and Nugent K. (2023). Hepatitis E virus infections: Epidemiology, genetic diversity, and clinical considerations. *Viruses, 15*(6), 1389.

Tene S., Diouara A., Sané S., and Coundoul S. (2025). Hepatitis E virus (HEV) infection in the context of the One Health approach: A systematic review. *Pathogens, 14*(7), 704.

Tricou V., Bouscaillou J., Laghoe-Nguembe G.-L., Béré A., Konamna X., Sélékon B., Nakouné E., Kazanji M., and Komas N. P. (2020). Hepatitis E virus outbreak associated with rainfall in the Central African Republic in 2008–2009. *BMC Infectious Diseases, 20*(1).

Wang B., Harms D., Yang X., and Bock C.-T. (2020). Orthohepevirus C: An expanding specie of emerging hepatitis E virus variants. *Pathogens, 9*(3), 154.

World Health Organization. (2025, April 10).*Hepatitis E.* World Health Organization. https://www.who.int/news-room/fact-sheets/detail/hepatitis-e

Wu J., Bai L., Guo N., Zhai G., Li M., and Guo Y. (2021). Immunological manifestations of hepatitis E-associated acute and chronic liver failure and its regulatory mechanisms. *Frontiers in Medicine, 8*, 725993.

Zhang W., Ami Y., Suzaki Y., Doan Y. H., Takeda N., Muramatsu M., Masuda T., Li T.-C. (2021). Generation of a Bactrian camel hepatitis E virus by a reverse genetics system. *Journal of General Virology, 102*(7).